Sun-North
SYSTEMS LTD.

Installation Instructions

for

Roll-Up & Drop Down Curtains c/w Wind Pipe

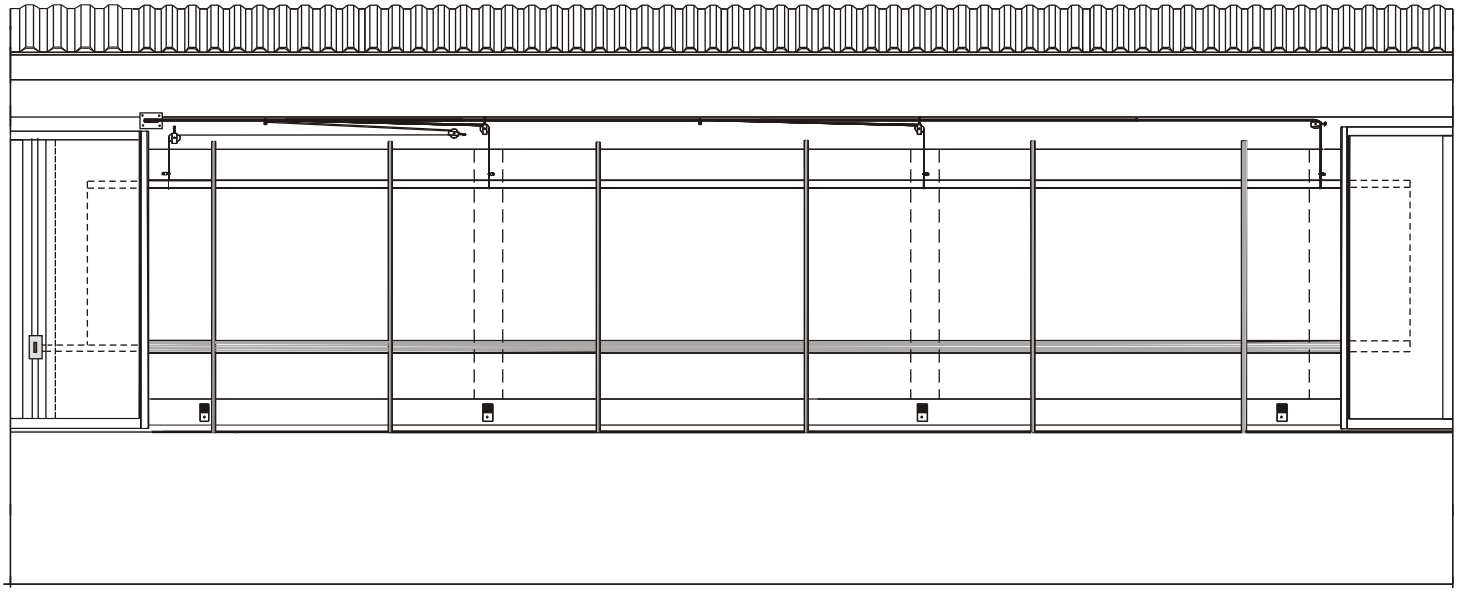

SN010x8001-8007

92 Railway St. Box 668
Seaforth, Ontario, Canada N0K 1W0

Tel: (519)527-2470
Fax: (519)527-2560

To Begin Your Installation

Signal Words

The signal words “Danger”, ”Warning” and “Caution” used in this manual indicate the degree of hazard that may be encountered by the user. These words are defined as:

Danger - Indicates death or serious physical injury will result if proper precautions are not taken.

Warning - Indicates death, serious physical injury or property damage can result if proper precautions are not taken.

Caution - Indicates some injury or property damage may result if proper precautions are not taken.

Qualified Persons

For the purposes of this manual and product labels, a qualified person is one who is familiar with the installation, construction, operation or maintenance of the equipment and the hazards involved. In addition this person has the following qualifications:

(a) is trained and authorized to energize, de-energize, clear, ground and tag circuits and equipment in accordance with established safety practices.

(b) is trained in the proper care and use of protective equipment such as rubber gloves, hard hat, safety glasses or face shields, flash clothing, etc., in accordance with established safety practices.

Important

These instructions do not purport to cover all details or variations in equipment, nor to provide for every possible contingency to be met in connection with installation, operation or maintenance. Should further information be desired or should particular problems arise which are not covered sufficiently for the purchaser's purposes, the matter should be referred to the Sun-North Systems sales office.

Safety

Electrical Safety

DANGER! Ignoring the following instructions can cause physical injury or death, or damage to the equipment.

WARNING! Only qualified personnel are allowed to install the drive and connections to the motor!

Never work on the drive, motor cable or motor when input power is applied. After disconnecting the input power, always wait for 5 minutes to let the intermediate circuit capacitors discharge before you start working on the drive, motor or motor cable.

Do not work on the control cables when power is applied to the drive or to the external control circuits. Externally supplied control circuits may carry dangerous voltage even when the input power of the drive is switched off.

To Begin Your Installation

General Safety

WARNING!

TO REDUCE THE RISK OF FIRE, ELECTRIC SHOCK, OR INJURY TO PERSONS, OBSERVE THE FOLLOWING:

- Installation work and electrical work must be done by qualified person(s) in accordance with all applicable codes and standards, including fire-rated construction.
- The installation is to be in accordance with the National Electrical Code, CSA C22.1, ANSI/NFPA 70, and local codes.
- CAUTION! This appliance is not intended for use by persons (including children) with reduced physical, sensory or mental capabilities, or lack of experience and knowledge, unless they have been supervised or instruction concerning use of the appliance by a person responsible for their safety.
- Check drawings and layouts provided to locate where the equipment is to be installed.
- Ensure work area is safe and that all security, policies and procedures for the facility are met.
- Inspect the lift device or mobile platform.
- Each person installing the equipment with a lift device or mobile platform must use a safety harness at all times.
- Other safety requirements may be required for installation.
- All workspace safety requirements, lock out procedures and hoarding of construction zone for the assembly and installation must be met and followed.

WARNING!

- Never remove or disable a machine guard or use a machine that has a missing or disabled guard.
- Never reach around, under, or through a guard.
- Report guards that are missing or not working properly.

To Begin Your Installation

Before you start, have you checked the following?

1. Measure the length and height of the opening to be sure it corresponds to the size of the curtain ordered. See table (right).

2. For this application you will be required to install a 2x4 sill along the opening. This 2x4 will give you the operating space for the curtain to be rolled up.

3. Do you have a 2x8 min. header above the opening? You will also require 2x4 framing for your boot ends. Ensure that you have the required 2x4 lumber on site before starting the curtain installation.

4. Is birdscreen to be installed with your curtain? If required this must be installed prior to the installation of the header and sill framing. See the section detail below.

Tool List

- Electric or cordless drill
- Circular Saw
- 7/16” socket (required for 1/4” lag)
- Utility knife
- Common hand tools
- Hack Saw / Sawzall
- 7/8” socket (6 point)

Exact Opening Height	Curtain
25”	DH30
37”	DH42
49”	DH54
61”	DH66
73”	DH78
85”	DH90

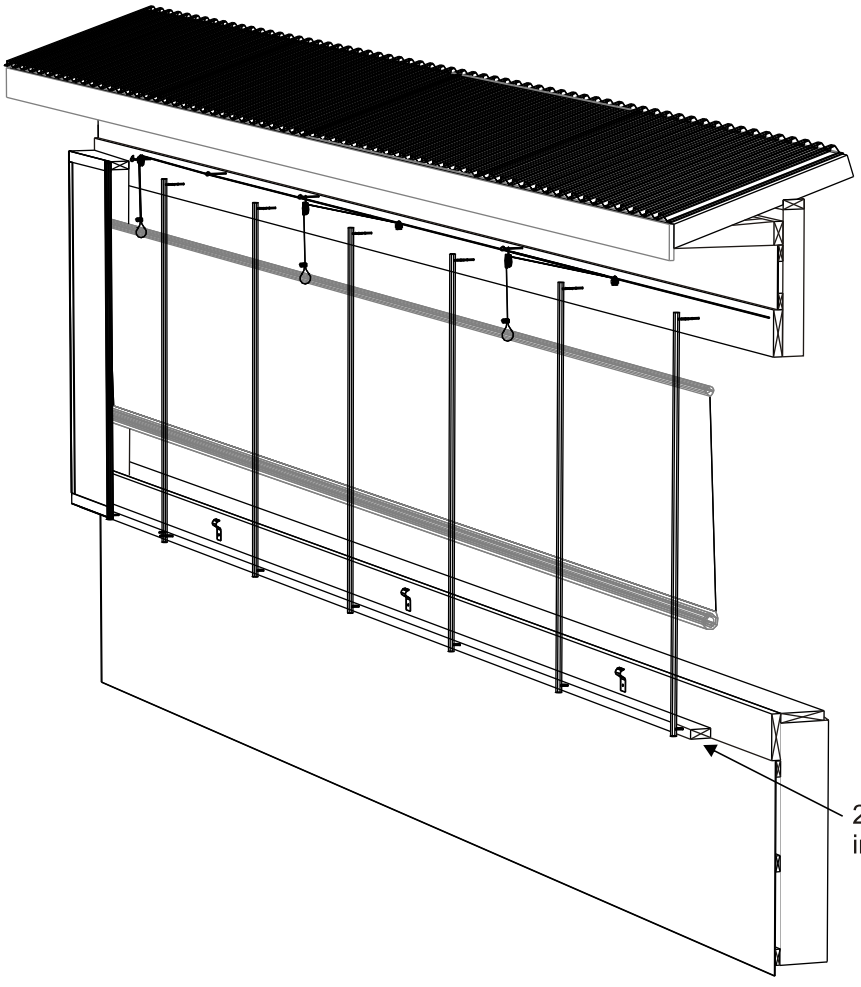

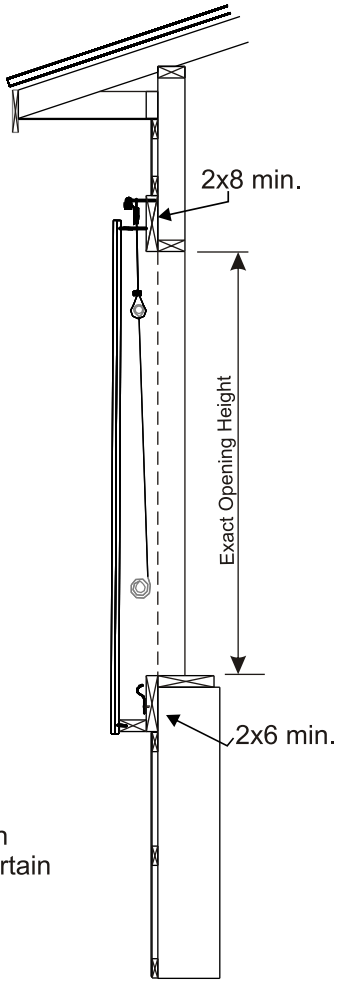

Common Parts for SN010x8001-8007

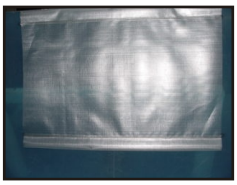

SN019X1001-7:
DH30-DH102 Double hem poly curtain.

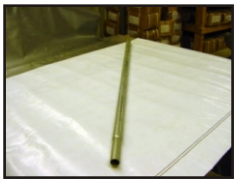

SN020X9102:
Galvalume tube 1" O.D. x 20ft one end swaged

SN020X2002:
Stainless Steel cable 3/16" diam.

SN020X0403:
Pan soc tek screw Z 10 x 1/2

SN020X2004:
Stainless Steel cable 3/32" diam.

SN022X0701:
S.A.E. Flatwashers Zinc 1/4

SN020X2102:
Galv. mall wire clips 3/16"

SN022X4003:
Hex Lag Screws Z 1/4 x 2-1/2

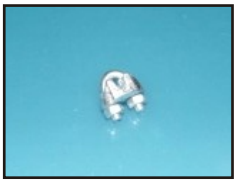

SN020X2103:
Galv. mall wire clips 1/8"

SN022X4006:
Hex Lag Screws Z 1/14 x 4

SN020X2202:
Medium Lag Eye Bolt

SN022X4008:
Hex Lag Screw Z 1/4 x 5

SN020X2232:
Nylon yolk pulley 2" swivel eye

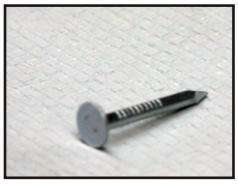

SN022x4210:
Roofing Nails Galv. 1-1/4

SN020X2255:
HDPE 1 ½" spacer

SN019X1200:
SH33 Poly Curtain Boot Material

Common Parts for SN010x8001-8007

SN022X4120:
White 1" Wood Grips

SN020X2270:
White plastic strip
7/8" wide x 8 ft.

SN022X4001:
Hex Lag Screws
Z 1/4 x 1 - 1/2

SN020X9003:
Hot dipped Galv. Rod
½" 20 ft

SN020X2251:
Tarp clip for 1”
tubing

SN020X2253:
Curtain hold down clip

Installing Your Roll-Up & Drop Down Curtains

Follow the Step-by-Step Instructions:

1. Take a look at the existing structure where you plan to install the new curtain:

Check the spacing of the structural columns along the entire opening of the barn. Note that birdscreen or livestock barrier should be installed prior to the Curtain installation if the project calls for this type of product. The image shown here has metal screen installed on the lower half of the opening as a livestock barrier. (Fig.1)

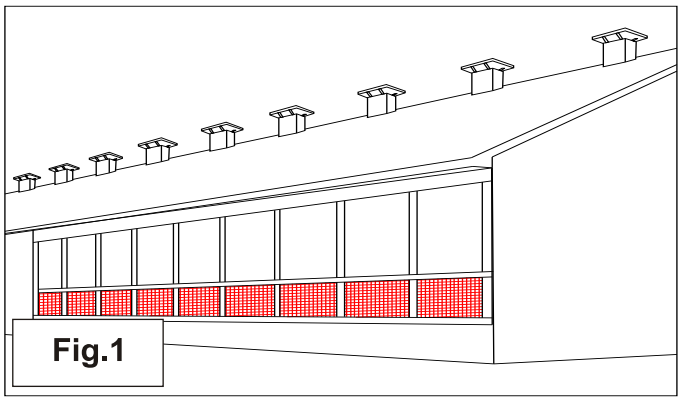

Fig.1

2. Rear boot fabric installation:

Both ends of the opening will require an end boot. The rear fabric of each end boot must be installed. Measure and mark 30" along the sill and header of the opening. (Fig.2)

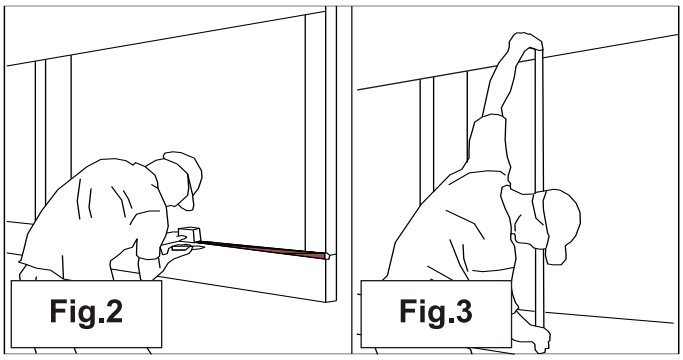

Fig.2

Fig.3

3. Measure and cut to size the rear boot material:

Measure from the top of the header frame to the lower edge of the sill frame. This is the maximum length of rear boot material that will be required. It is best to provide yourself with a little extra length and trim this off when finished. (Fig.3)

4. Tack the boot material up with roofing nails:

It is important to install the material as tight and wrinkle free as possible. Tack the top corner of the boot material 4 ½" up from the bottom of the header 30" out from the end of the framing. Tack the material up in place using flat top roofing nails 6 to 8 inches on center. You will see that two rows of nails are used along the bottom sill. This is done so that the bottom of the inside boot material will not fill with debris. (Fig.4)

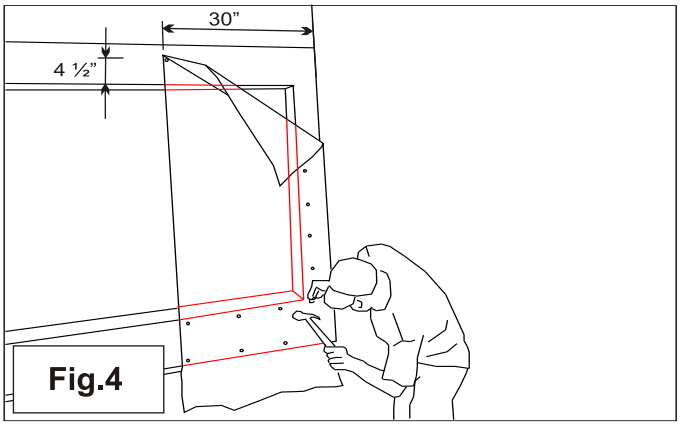

Fig.4

5. Trim off extra material:

Take a knife and trim off the extra length or width of material that extends beyond the header, sill and side framing of the opening. (Fig.5)

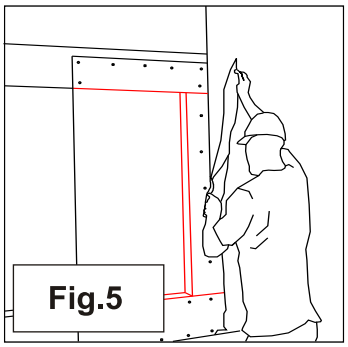

Fig.5

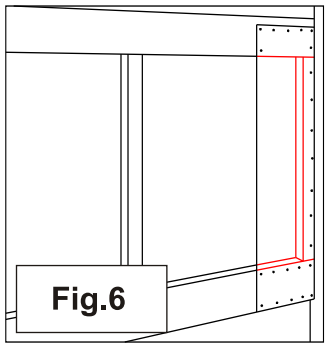

Fig.6

6. Both ends of the opening:

You should now have both ends of the wall opening capped with rear boot material as shown. (Fig.6)

7. Measure and cut the required lengths of framing for the boot:

Measure from the bottom of the header to the bottom of the sill and add 4 ½". The measurement should equal the height of the rear boot material. Cut a 2x4 so that you have one piece at this measured length and one more piece cut to a length of 30", this is done for each end. This is required for the top and side of the boot to provide the depth required to clear the curtain and possible running gear. Pre-drill 5/16" holes approx 32" o.c. and place 5" lags with washers in these holes. These lags are what will hold the boot frame to the barn. (Fig.7a)(Fig.7b)

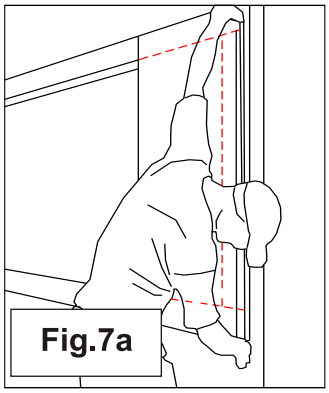

Fig.7a

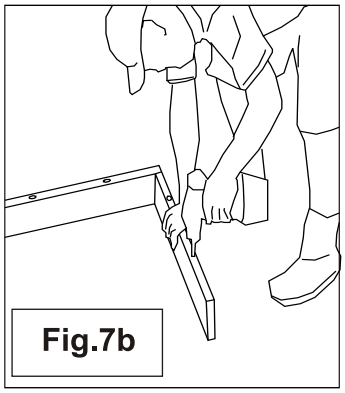

Fig.7b

8. Install the boot frame:

Place the boot frame into position and drive the lags through the boot frame and into the perimeter frame. Keep the bottom of the boot flush with the lower edge of the sill framing and to the outside edge of the jamb framing. (Fig.8)

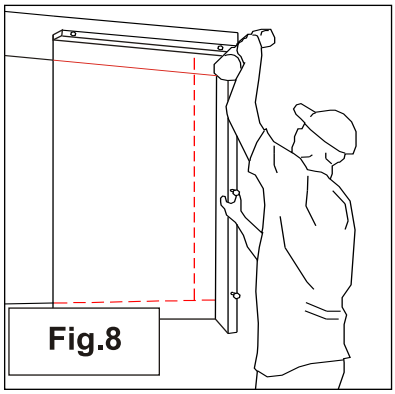

Fig.8

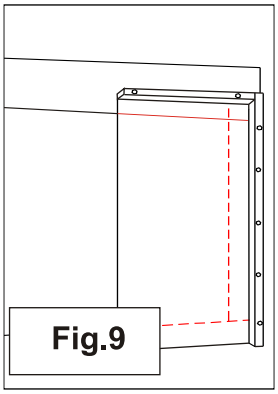

Fig.9

9. Boot frame:

You should now have a boot frame installed as shown. Each end of the opening along the barn must have this installed. (Fig.9)

Installing Your Roll-Up & Drop Down Curtains

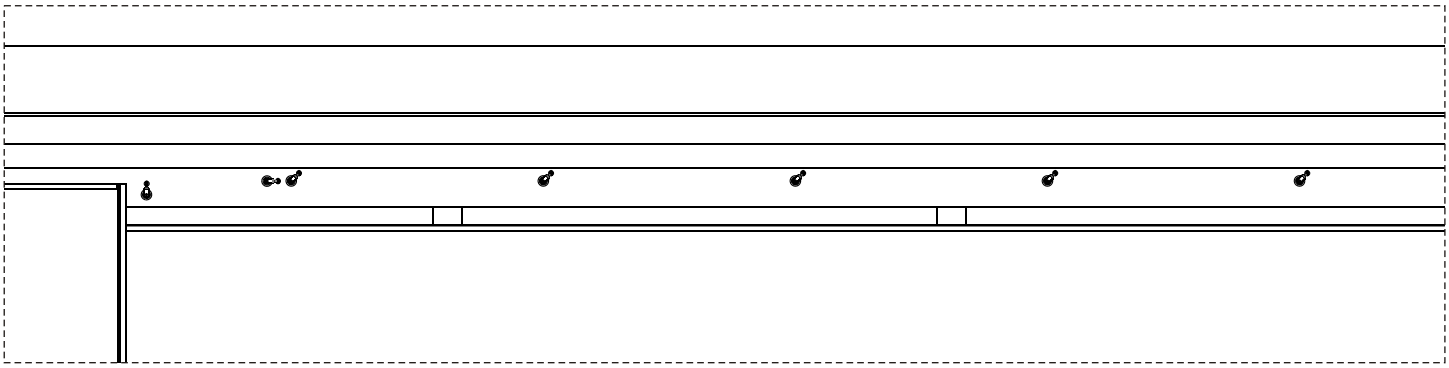

Part 2. Installing the Curtain.

1. Installing the pulley wheels and eye screws/main cable pull:

Measure 1” down from the top of the header and scribe a line. All eye screws will be placed along this line. Start at both end of the rough opening and measure 33” to locate the first eye screws. Next measure along the line and locate the balance of the eye screws using a spacing of 8’-0” on centre for curtains up to 90” opening height (use 10’-0” o/c for curtains with openings over 90” high.) The height of 1” is critical to ensure that the curtain follows the contour of the opening and allows the main lift cables to travel freely though the eye screws.

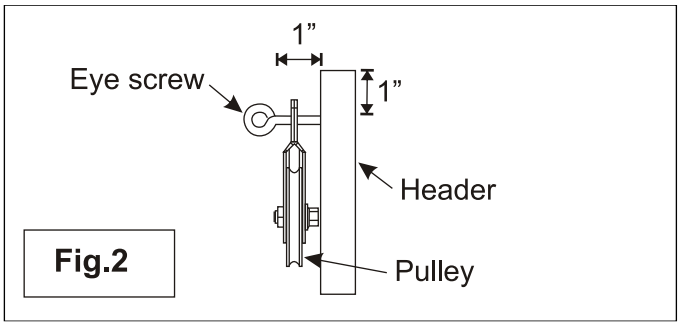

Fig.2

2. At these measurements screw in 2 ½”x1/4” eye screws with a pulley hanging from the shaft. Screw it in until there is 1” of shaft remaining our from the face of the header (this allows the pulley to swing freely).

3. Installing the pulley wheels and eye screws:
Start the installation of each eye screw by breaking the surface using a hammer as shown in figure 3. The hammer is only to start the eye screw into the header material.

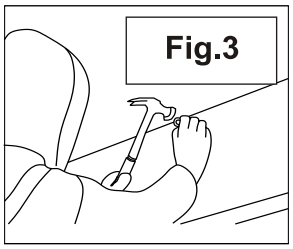
Fig.3

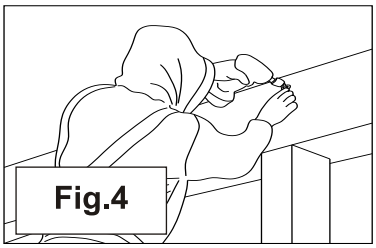
Fig.4

4. Installing the pulley wheels and eye screws:
Using a 7/8 socket and drill, screw the eye screw in until all threads are into the lumber, leaving 1” of shaft out as noted in figure 2.

5. Install the Standard Pulley and double back Pulley:

The double back is required for the first secondary cable drop (from the pull end of the main cable). (Fig.5)

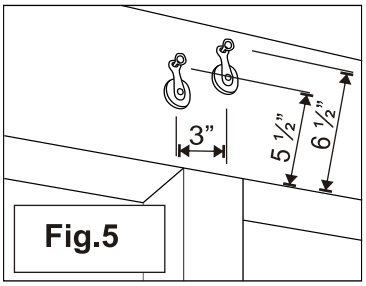

Fig.5

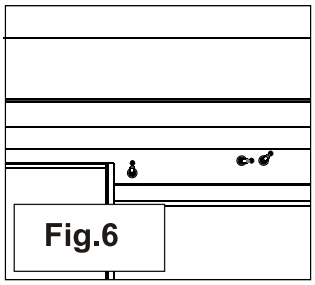
Fig.6

6. See detail for placement of extra pulley. (Fig.6)

Note: Before secondaries are installed, the other end of the main must be attached to an actuator or winch. The main cable must be pulled tight before any secondary cables are installed.

Installing Your Roll-Up & Drop Down Curtains

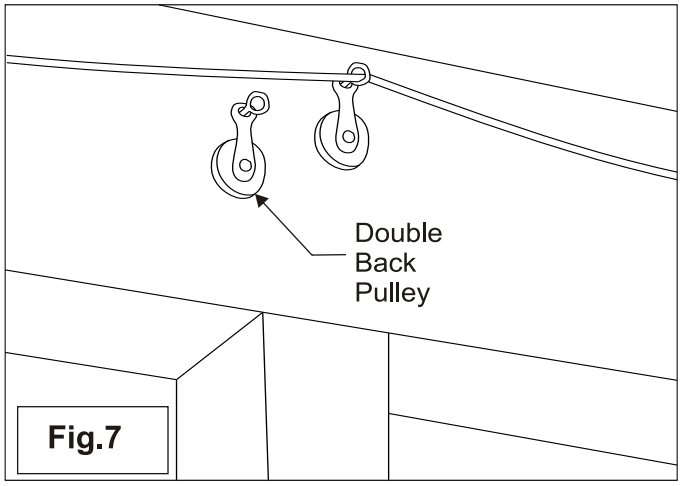

Fig.7

7. & 8. Install the Main Pull Cable:

The main cable travels from the interior of the structure around the main cable pulley and then through all of the eye screws that hold the Standard pulley wheels to the barn. **Do not** thread the main cable through the double back pulley eye screw as shown in Fig.7. (Fig.7)(Fig.8)

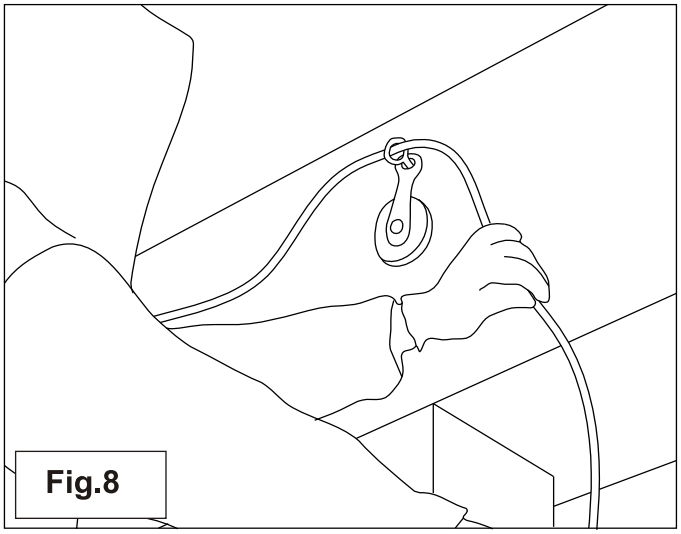

Fig.8

9. Installing the Main Pull Cable:

The main cable is to follow along the entire length of the building. At the last eye screw/pulley the main cable is now to pass through the pulley and **not the eye screw**! An eye screw is to be installed into the middle sill framing. The end of the main cable is then put through this temporary eye screw, looped onto itself and fastened under tension using a cable clamp as shown**.** (Fig.9)

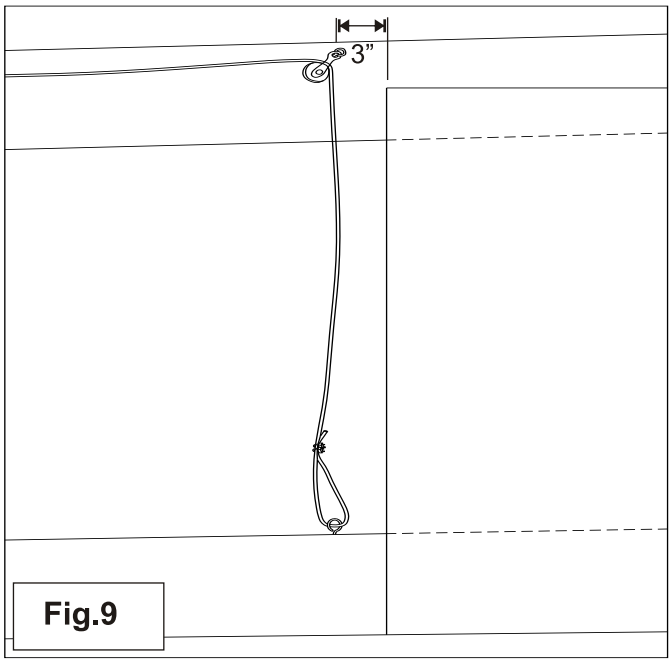

Fig.9

10. The first step is finding out which end of the opening the winch or power actuator is to be mounted to (usually closest to power source).

11. Each cable-down style curtain will require something to operate the curtain, in most cases a winch or an automated “actuator” is used. Either case requires an outside corner wheel (SF1) to angle the cable through the header to go inside. Often this can be placed above the end boot (if there is enough room) or else in front (beside) the boot (**Caution:** most outside headers have more height available than that of the inside).

12. Trace mounting holes with a mark where the entry point of the cable will go through the header by setting the corner wheel in place.

13. With a long enough drill bit, the entry point can be drilled through both sides of the header. Pre-drill mounting holes 1/4”.

14. Mount pulley using 3/8” x 2” lags and also put a 6” eye-screw (to be used as a guide) beside the corner wheel. Lace cable through guide eye, around pulley and through the hole into the barn.

Installing Your Roll-Up & Drop Down Curtains

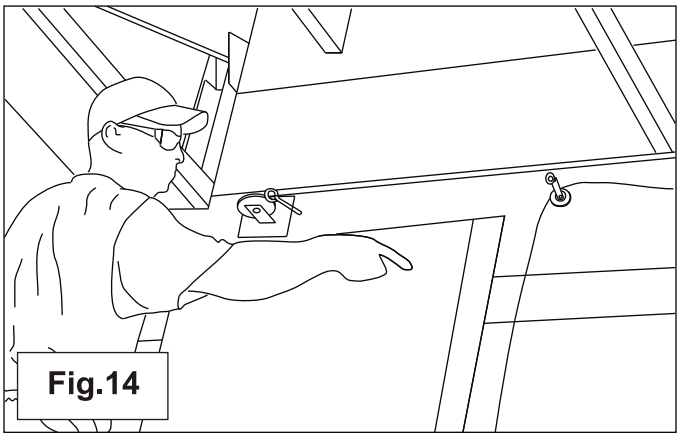

Fig.14

The following only applies it the operating mechanism is an actuator.

15. Inside the building, find the hole that you drilled through the outside for your cable to come in and repeat steps 12 to 14, with the cable to go around the pulley the direction that the actuator is to be mounted.

16. Open the actuator and extend the sling (cable) out as far as it goes. Measure from the tip of the sling to the end of the actuator furthest from you (motor end). Add a foot to your measurement. Now you know how far away from the corner-wheel to mount the actuator.

17. The height of the actuator is 9 1/4". Ensure there is enough header available to mount the bottom lags in the actuator, if not, drill new 3/8" holes in the actuator for mounting.

18. Use the actuator measurement to find where the back end of the actuator will be mounted. The first set of holes is 14 ½"away form the back end and the rest are 2' apart. Pre-drill the header with 1/4" hole to match the top holes of the actuator; typically 1 1/4" from the ceiling. This makes mounting the actuator much easier.

19. Using 3/8" x 2" lags, and a helper, mount the actuator. Finish pre-drilling and lagging the corresponding bottom holes.

20. Using three cable clamps, loop the cable through the actuator's sling and pull the cable as tight as you can while tightening clamps. Slide cable separator as close to the clamps as possible, tighten these two clamps as well. Trim excess cable.

21. If power is hooked up to the actuator at this point, allow the cable to tighten by running the actuator "up" a little bit. If power is not available yet, an extension cord can be used to power the motor, or else simply turning the motor will effectively tighten the cable. After this is done, the secondary cables can be installed.

The following only applies if the operating mechanism is a manual winch:

22. Inside the building, find the location that the winch is to be mounted. Assemble and mount the winch in an accessible location.

23. Mounting the inside corner wheels can follow steps 12-14, only the pulley (SF1) should be angled towards the winch to minimize wear on the corner wheel.

24. Using a minimum of 2' for extra cable, resume threading the cable through the necessary available holes in the winch to secure the cable (should not slip). Crank winch until it seems tight enough. After this is done, the secondary cables can be installed.

25. Double Pull System (Short Actuator, tall curtain):

A double pull system is used in most cases for taller curtains (greater than 6' in height) and require this type of setup. Instead of a giant actuator capable of lifting an 8' curtain, a 4' actuator is used. To use this 4' actuator you must double the pull range of the 4' actuator using an extra pulley. If your system requires this follow steps 15-21 for actuator mounting.

26. The difference with the double pull systems are an extra corner wheel and a two part line pulley is added. The second corner wheel is added beside the inside corner wheel. Offset the second pulley by moving it down 3" from the first pulley. On the two part line pulley, take the 3/8" bolt and nut apart and tighten it back up after putting the sling of the actuator through it.

27. The cable can now come from outside, through the barn around the first corner wheel, through the two part line pulley and it is to be secured by clamping a loop around the second corner wheel.

Installing Your Roll-Up & Drop Down Curtains

If using an actuator set the limit switches now:

28. This is an extremely important step. Due to the amount of power the actuator has, failure to set the limits can cause extensive damage to the curtain system and possibly the building.

29. First raise the curtain to its “top” limit in the opening, this means when the top hem of the curtain has overlapped the top header by 2 ½”to 3” along the opening of the building.

30. At this point the “pull block” in the actuator should be near the motor end of the actuator. There is a stainless steel rod running from one end of the actuator to the other. You will see a number of collars fastened to this rod, three of which are located in the section of the actuator with the threaded rod and pull block. Only these three are used for setting the limits.

31. Try shoving the stainless steel rod towards the motor. Notice the tension caused by compressing the spring. You must loosen the collar closest to the motor compartment (not in the motor compartment) and slide it up against the pull block. Now shove the rod again, only this time, pay attention to hear a small click. This is the sound of the limit switch triggering its off position. When you hear this click, tighten the collar against the pull block.

32. The same steps apply for the bottom limit, except you use the two collars at the other end of the actuator. After wind pipe is installed, you should run the curtain down, setting the bottom limits as low as possible without causing the cable system to slack off. Find this point, raise it a bit and then set the bottom limit.

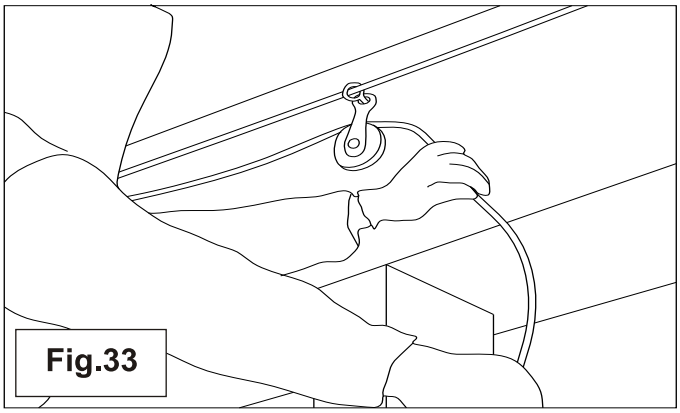

33. Installing secondary pull cables:

Cut secondary cables to length (opening + 20") and fasten each cable to the main and pass them through the pulley wheel. (Fig.33)

34. Installing secondary pull cables:

When fastening each secondary, use one cable clamp and provide 10” from the pulley wheel when the curtain is fully open ensuring there is enough travel between cable clamp and next pulley down to lift the entire curtain. (Fig.34)

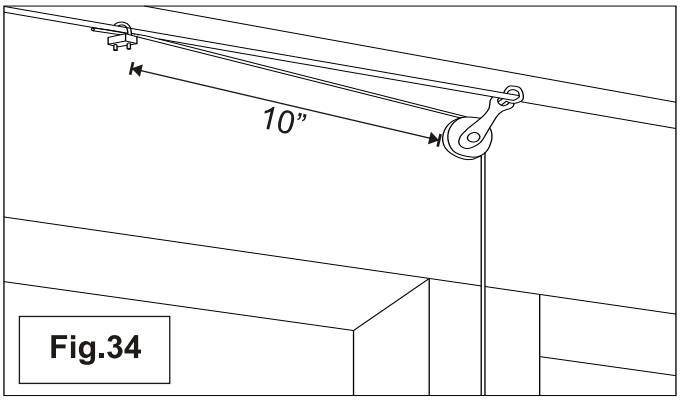

35. Double Back Pulley Secondary Hookup:

The Secondary for the double back and standard pull must have 2 cable clamps installed as shown below. (Fig.35)

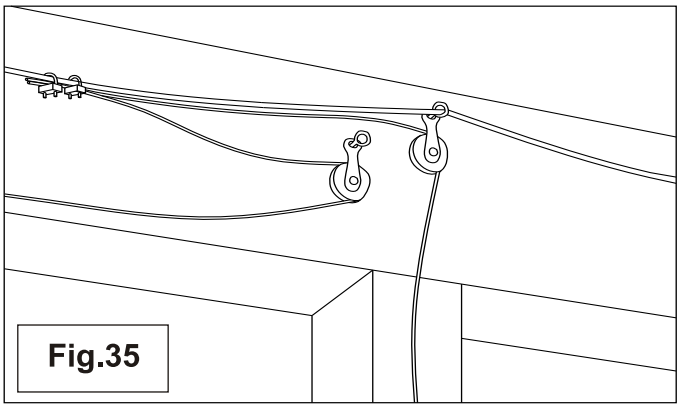

36. Double Back Pulley Secondary Hookup:

Put the double back under tension to ensure that they will not interfere with other cables. (Fig.36)

37. Installing the curtain material:

Measure the opening that is to be covered. It is

important to check your curtain material to ensure that it is 5” to 6” larger than the opening height. (Fig.37)

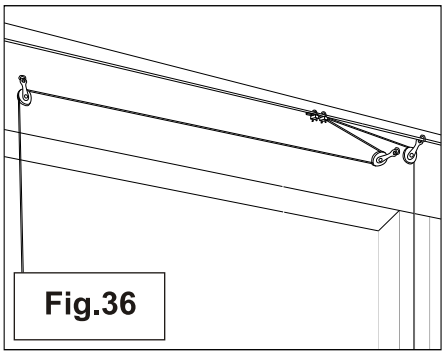
Fig.36

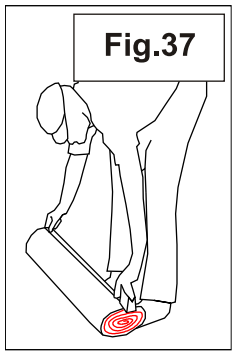
Fig.37

38. & 39. Installing the curtain material:

Pull out the length of curtain required to cover the sidewall opening. Temporarily hang the curtain to the middle header of the opening tacking the curtain in place using nails. Do not drive the nail all the way in so that it can be removed. Also note to install the nail between the two rows of stitching but do not break the stitching. (Fig.38)(Fig.39)

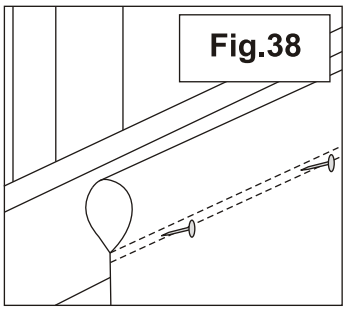
Fig.38

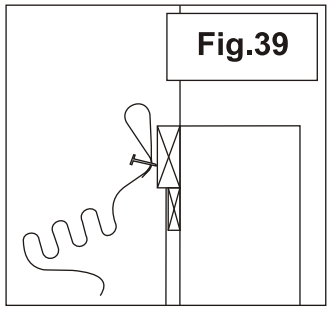
Fig.39

40, 41 & 42. Install the upper curtain pipe:

With the curtain temporarily hanging in place you can now install the upper curtain pipe by sliding each length of pipe into the upper hem. Each pipe will be wedged so that the next pipe can be joined to each other. Two self tapping tec screws are used to permanently fasten the pipes together. (Fig.40)(Fig.41)(Fig.42)

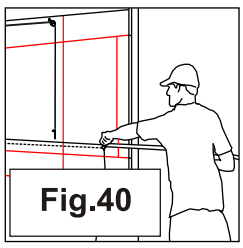
Fig.40

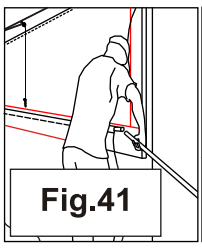
Fig.41

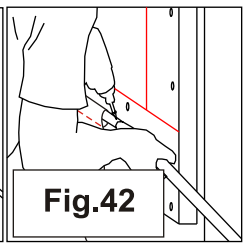
Fig.42

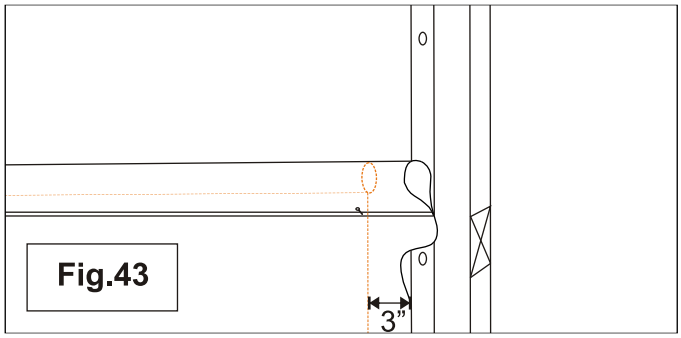

Fig.43

43. Install the upper curtain pipe:

Continue to install upper curtain pipe until the entire hem is filled. The pipe should be cut to fit leaving 3” from end of pipe to the end of the boot framing at both ends of the opening. (Fig.43)

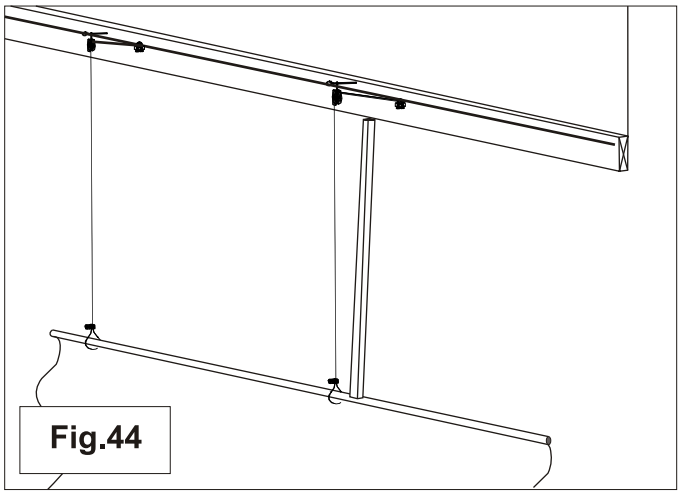
Fig.44

44. Keeping everything level:

Using a scrap pipe, wood, etc., cut a length measuring from the top of the hem of the curtain, to the bottom of the top header, creating a guide stick which will be used to make sure the curtain will be hooked up and essentially seal evenly along the entire length of the building. (Fig.44)

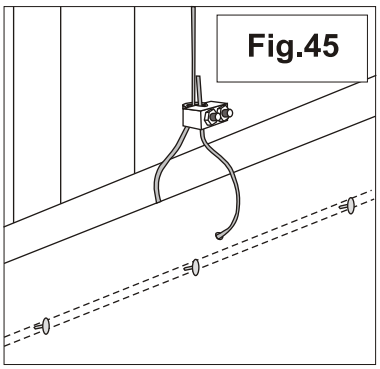
Fig.45

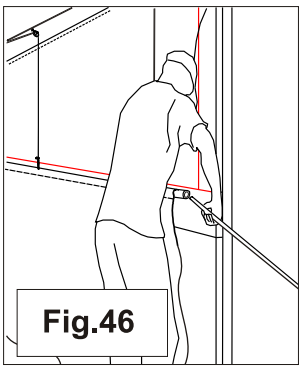
Fig.46

Installing Your Roll-Up & Drop Down Curtains

45. Hooking up the secondary cables to the curtain:

Starting at the pull end (nearest the corner wheel/actuator), poke a small hole through the top hem of curtain directly under the top hem pipe, in line with the first drop cable when pulled straight down (we use a cut-off nut driver; a sharp, hollow tube). Add a small clamp onto the cable, and guide the cable through the back of the hem. Pull the cable through the curtain and loop it back on itself through the clamp.

Hold guide stick on top of the curtain pipe, and pull the cable up until the stick hits the bottom of the header. Tighten the cable clamp with a 5/16" nut driver and snip off excess cable. Repeat this process until you reach the far end where the main cable is secured to the temporary eye-screw.

Loosen the cable clamp. Note: the curtain may jump up due to the initial tension created by actuator/winch. If a jump does occur, use best judgment to compensate when tightening cable, as the stick will no longer be accurate. (Fig.45)

46. The top hem pipe requires a 20' length of weighted rod which is inserted into the top hem pipe at each end of the curtain. This helps to ensure that when the curtain is fully open the weight will help the curtain fold evenly. (Fig.46)

47. The Tarp Clips should now be fastened to each end of the curtain. Snap a tarp clip on each end and fasten with a #10 x ½" Tec screw. (Fig.47)

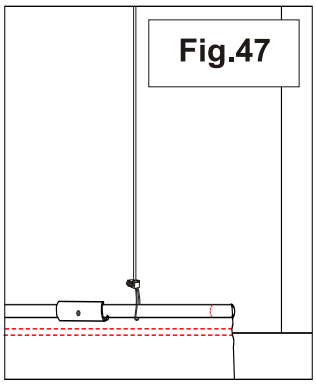

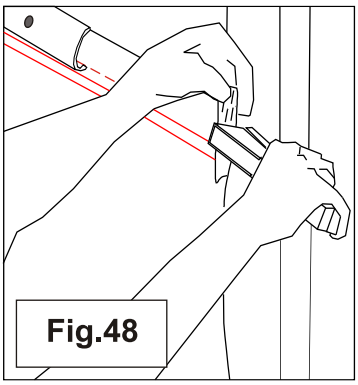

48. Fold over the material capping over the end of the rod. Staple closed as shown.

Make sure that there are no temporary nails left holding the curtain to the sill or any other possible objects that could hang up on the curtain when it is raised. The curtain should now be raised to a height that will make it easiest to install the bottom pipe (if applicable). (Fig.48)

49. Installing pipe into the bottom hem:

Now that the curtain has been raised into place, you can now feed or stuff the bottom pipe into the bottom hem of the curtain. Feed the first pipe into the bottom hem working from the "non-operating" end of the curtain (do not start from the end that requires a gear box). (Fig.49)

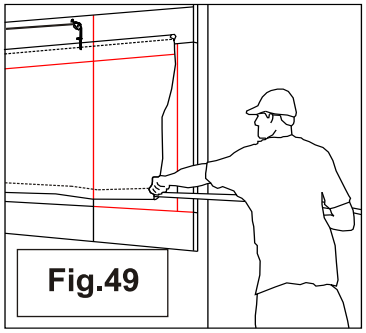

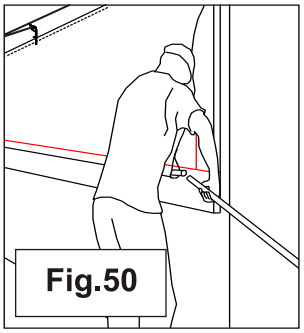

50. Installing pipe into the bottom hem:

Push the first pipe into the hem with approximately 12" still sticking out of the curtain. Note: the swaged end should be left out. (Fig.50)

51. Installing pipe into the bottom hem:

Using a drill and a #10 x ½ tec screw, permanently fasten both pipes together where they join/overlap. (Fig.51)

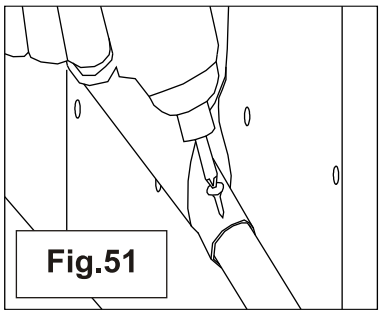

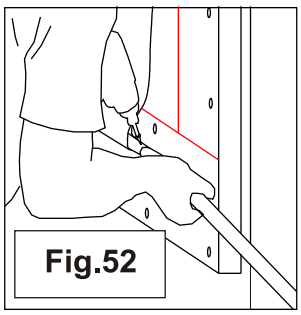

52. Installing pipe into the bottom hem:

Twist the pipe around 180 deg. and install a second tec screw in the same manner permanently fastening the pipe from both sides. (Fig.52)

53. Installing pipe into the bottom hem:

Again, push the pipe into the hem and repeat until the hem is full of pipe. You will have extra pipe protruding from the curtain, leave this and walk down to the other end of the curtain (operator end of the curtain). (Fig.53)

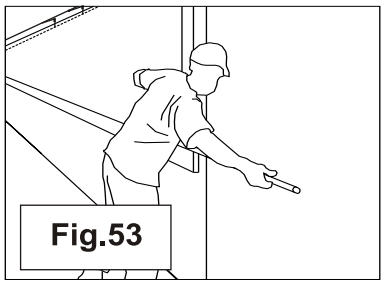
Fig.53

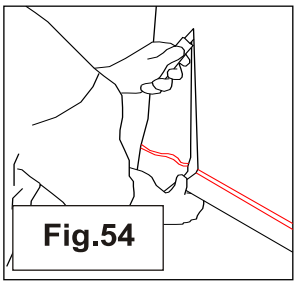
Fig.54

54. Installing pipe into the bottom hem:

The extra curtain material that is not required (above the area to where the gear box will be installed) can now be cut away (approx. 6" of curtain will be cut away up the length of the operating side). (Fig.54)

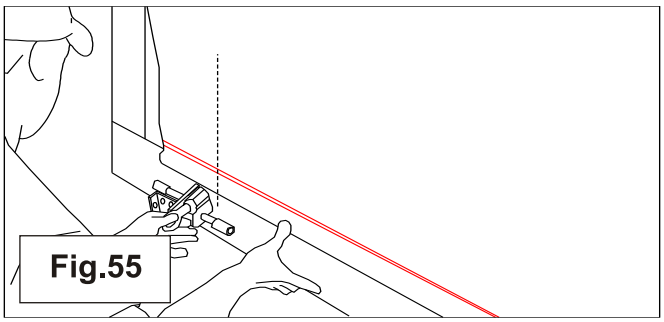
Fig.55

55. Ensuring the correct length of pipe in the bottom hem:

At the operator/gearbox end, push the bottom curtain pipe back/out from the side boot to allow clearance of the gearbox operator. You should allow approx 6" of space from inside of framing to the end of the pipe. If you are unsure you can hold the gear box up to the curtain so that you have a better idea of the space to leave. (Fig.55)

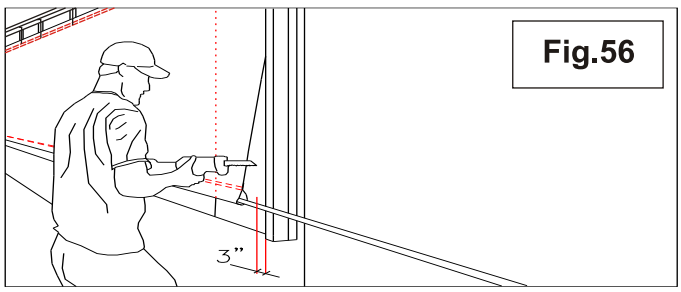

Fig.56

56. Installing pipe into the bottom hem:

Walk back to the other end of the curtain (to the non-operating end of the curtain). Push the curtain material back on the pipe and mark the pipe 3" in from the inside of the boot framing. You will now cut off the extra pipe at this mark removing the extra pipe that is left sticking out beyond the boot framing.(Fig.56)

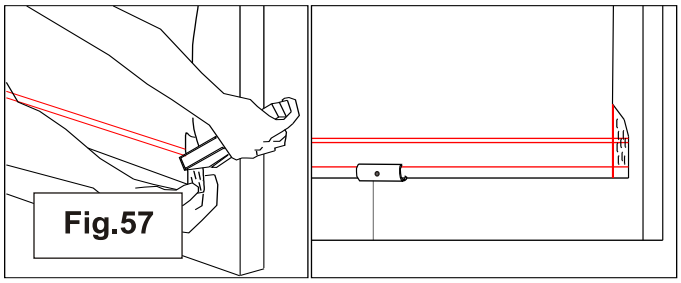
Fig.57

57. Close the end of the curtain hem:

The non-operating end of the curtain can now be finished by cutting the material leaving a 3" flap on the hem extending past the pipe and fold over the extra material at the hem and staple it shut. Doing this helps to stop the movement of the curtain and will also stop the hem from pulling apart. Ensure that the hem has a minimum of 2 staples over the stitching and over the opening of the pipe pocket/end. (Fig.57)

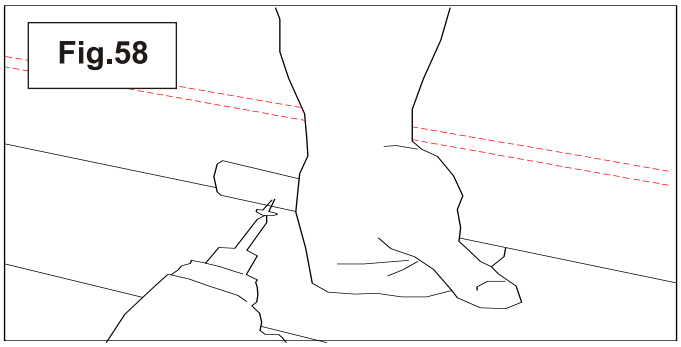
Fig.58

58. Installing tarp clips:

You now must install the tarp clips that will hold the curtain tight to the bottom pipe. Two tarp clips (the starting at each end of the curtain) are to be permanently fastened using a tek screw as shown in this image. Ensure that the curtain is pulled tight into place when these are installed. (Fig.58)

59. Installing tarp clips:

The remainder of the tarp clips can now be installed by simply snapping them over the bottom pipe. The clips are spaced approx. 8'-0" apart and ensure that these clips are all on at the same orientation (i.e. straight up from the bottom). Every other clip is fastened with a #10x1/2" tek screw. (Fig.59)

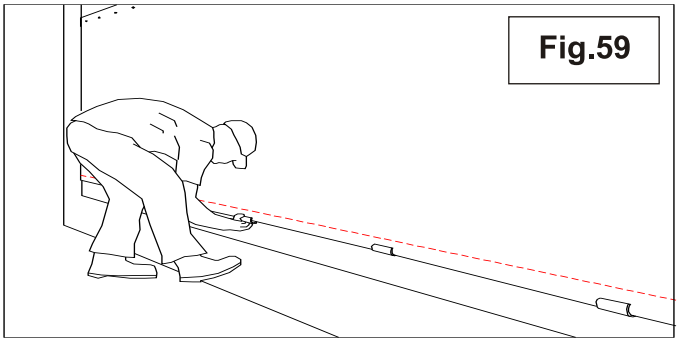
Fig.59

60. Installing the hold down clips:

A clip is installed 8'-0" o.c. using ¼" x 1 ½" hex lags along the sidewall opening. (Fig.60)

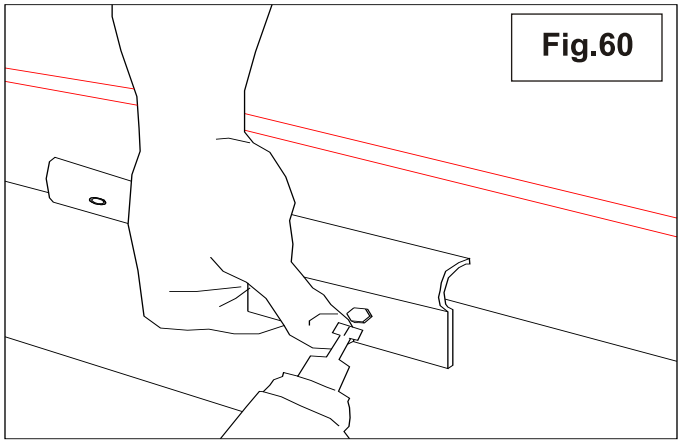
Fig.60

61. Fully Close the Curtain.

If you didn't already raise the curtain to its fully closed position when closing it the first time, now is a good time to do so. Raise the curtain until the top hem overlaps the header by 2 ½"to 3" for optimum seal. Make sure to check that the bottom hem is equally sealed. Refer to actuator instructions to set the limits, if an actuator is being used. Caution: limits must be set in order for the actuator to stop at the correct time or distance. Failure to set the limits can result in extensive damage to the assembly.

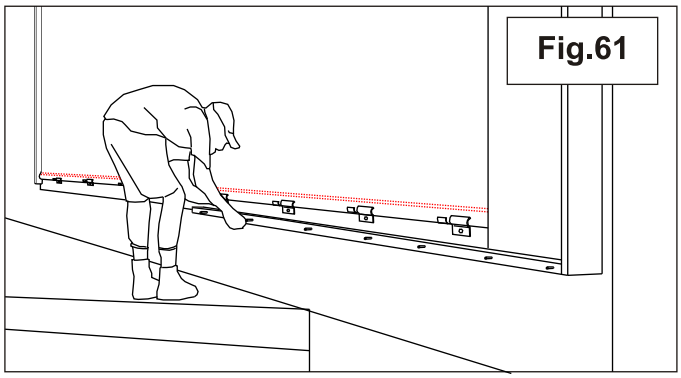
Fig.61

62. Installing the sill framing:

A number of 2x4 lengths will be required to complete the entire sill framing that is required along the entire opening. You will be required to pre-drill holes at 32" o.c into the edge of each length of 2x4. With each sill pre-drilled, place 1/4" x 5" lag with 1/4" flat washer into each hole. One person is now able to hold the sill at its mid point and fasten it at the correct position on the barn opening. You must ensure that the bottom of the 2x4 sill is flush with the bottom of the lower sill plate. Ensure that the 2x4 sill is installed level over the entire opening of the barn. The sill will complete the framing of the end boots as it will cap the bottom of the boot framing.(Fig.62)

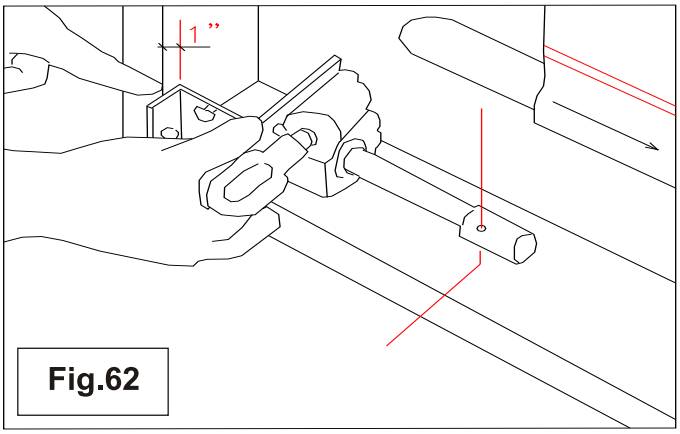

Fig.62

63. Gearbox installation:

It is important to ensure that the gearbox has room to move along the boot framing and that the pipe installed in the bottom hem is the correct length. Line up the gearbox so that it will have 1" clearance from the side framing and measure the distance to where the pilot hole is on the gearbox drive shaft.

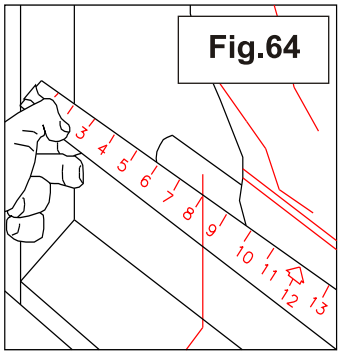

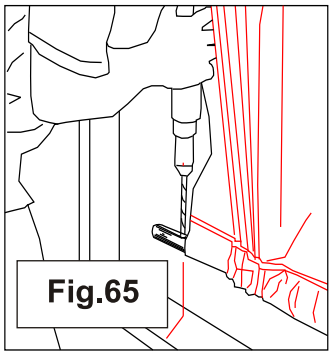

64. Gearbox installation:

Carry the measuring tape up the side of the boot framing and make a mark at the same distance on the lower pipe that is in the bottom hem of the curtain. (Fig.64)

65. Gearbox installation:

You will now drill a 1/4" hole through the bottom pipe on the mark that you have made. You may have to push the material back along the pipe to gain access to the proper amount of pipe. (Fig.65)

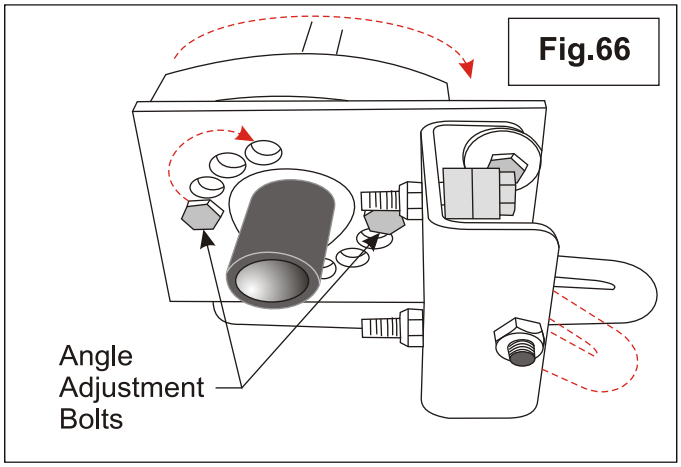

66. Angle adjustment:

The angle of the gearbox can be adjusted on its mounting to enable smooth operation at different heights on the sidewall. The higher the curtain is on the sidewall the gearbox must be adjusted to compensate to allow operation. (10mm wrench required) (Fig.66)

67. Gearbox Installation

Feed the gearbox into the bottom pipe and install the ¼" x 1 ¼" carriage bolt through the hole that you drilled in the pipe. The bolt should pass through the hole in the pipe, through the gearbox shaft and out through the bottom of the pipe. Install the lock nut on the bolt and then push the material back along the pipe. (Fig.67)

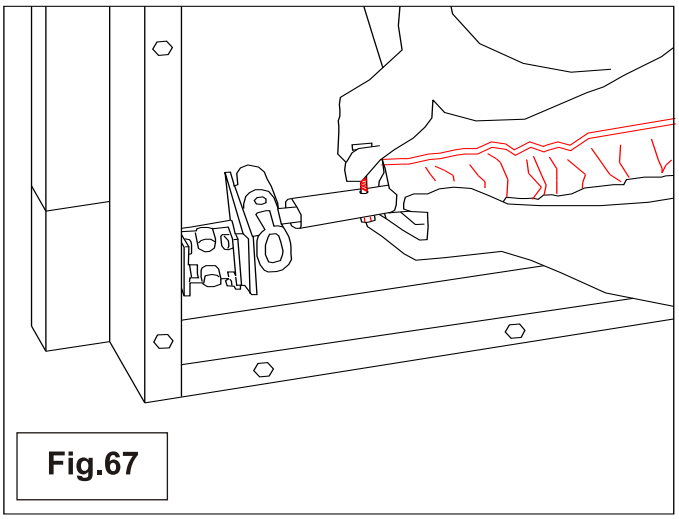

68. The Gearbox is now installed and should look as shown:

Note: the angle of the hoop/handle on the gearbox can be adjusted so that binding will not occur during operation at higher locations from grade level. The angle is adjusted by removing the mounting plate, rotating and reinstalling the bolts in the alternative holes. Also see Fig.66. (Fig.68)

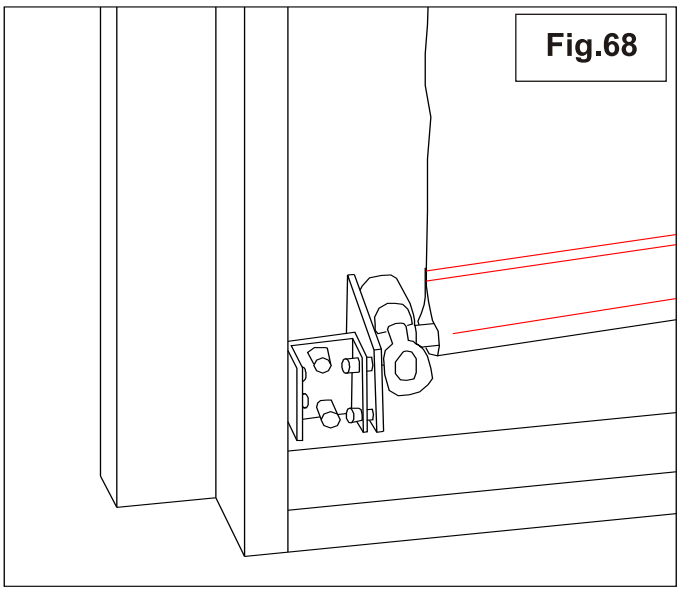

Installing Your Roll-Up & Drop Down Curtains

69. Installing the Gearbox Track:

Measure the overall length of the framed opening as this is the dimension you will use to cut the correct length of gearbox track. Pre-drill a ¼" hole in both ends of the track ¾" in from the end(used to mount the track to the framing). (Fig.69)

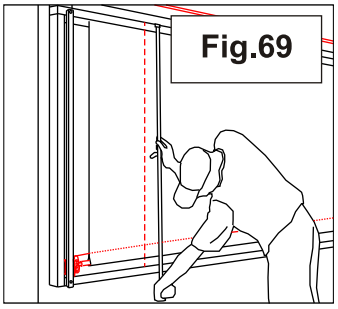
Fig.69

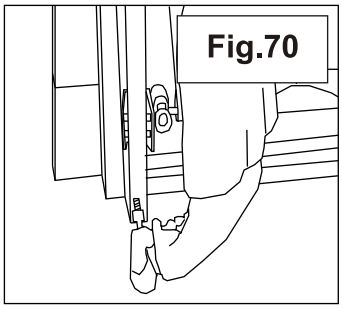
Fig.70

70. Installing the Gearbox Track:

Feed the track into the wheel of the car body (this is part of the gearbox assembly).
Mount the track vertically/plumb with a 3" lag at both ends. (Fig.70)

71. Finishing the End Boots:

Again, measure the full framed opening from top of the top sill frame to the bottom. You will use the measurement to cut a length of pipe that will be used to support the boot material for each end. (Fig.71)

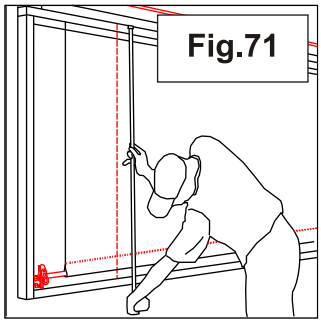
Fig.71

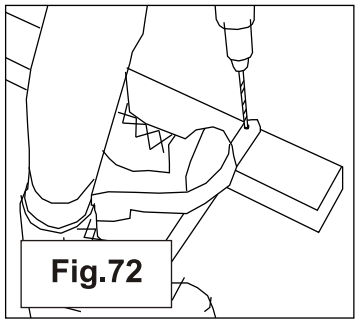
Fig.72

72. Finishing the End Boots:

Pre-drill a ¼" hole at each end of this boot pipe ¾" from the ends. (Fig.72)

73. Finishing the End Boots:

Cut boot material 6" longer than the boot pipe and then feed the boot pipe into the hem side of the boot material. (Fig.73)

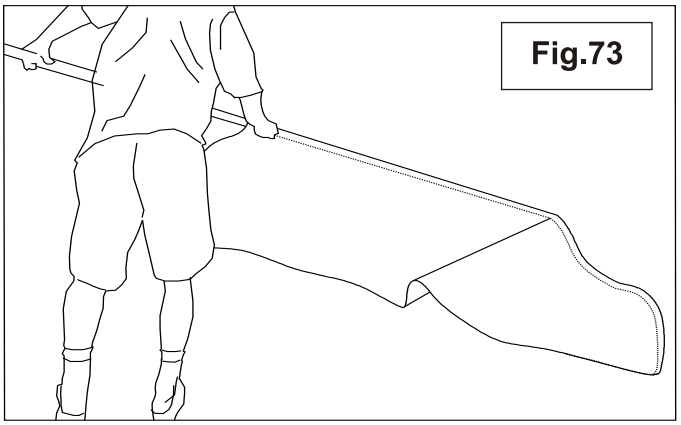
Fig.73

74. Finishing the End Boots:

Place the boot material and pipe at the open end of the boot framing so that it is 1 ½" from the end of the wood boot or flush with the back boot and drive a 2 ½" lag in the top and bottom pre-drilled holes of the boot pipe. (Fig.74)

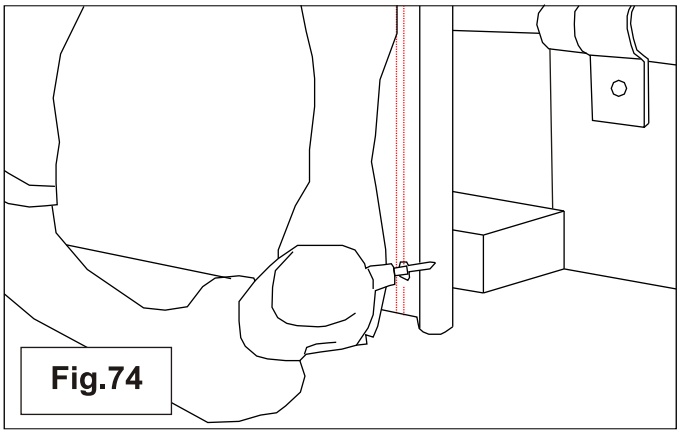
Fig.74

75. Installing boot material:

It is important to keep the boot material pulled tight and without any creases. While pulling the boot material, tack the material along the top and bottom edge of the boot framing using roofing nails. You must leave the gearbox side of the boot material free as the next thing you will do is install the side blocking that provided a finished opening to the gearbox. (Fig.75)

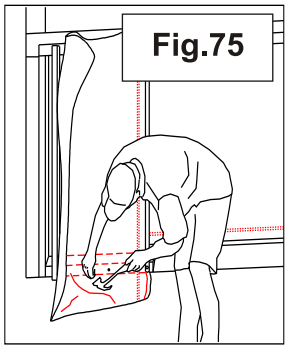

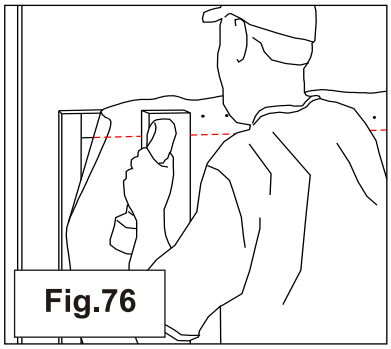

76. Installing boot material:

Using the same measurement that you cut the boot pipe in Fig.77, cut a 2x4 to the same length. You will now place the 2x4 vertically over the boot framing on top of the boot material. This 2x4 should be placed 3" away from the gearbox track to ensure its free movement. Lag the 2x4 at the top and bottom fastening into the boot framing. (Fig.76)

77. Installing boot material:

Your end boot should now look like this. (Fig.77)

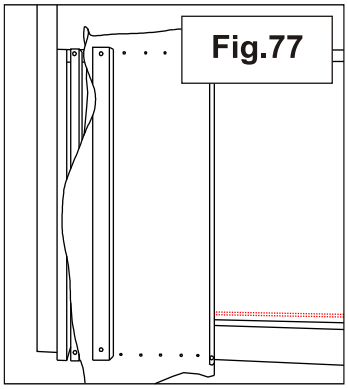

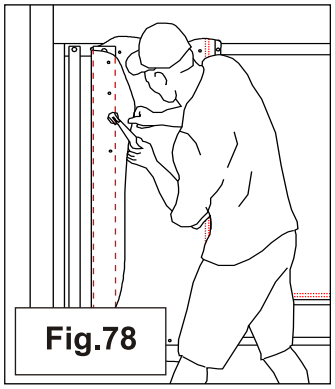

78. Installing boot material:

You will now wrap the boot material over the 2x4 vertical and fasten the material with the same roofing nails keeping the material tight and free from creases. (Fig.78)

79. Installing boot material:

The extra material that extends beyond the boot framing must now be trimmed off using a sharp utility knife. (Fig.79)

80. Finishing the Boot:

Puck board strips are now cut to length and installed over the roofing nails using wood grip screws at 8" o.c.. Ensure to keep tension on the plastic strip as it is being installed. This will give extra support for the material and will also provide a very nice clean look to the boot. (Fig.80)
Note: the boot at the other end can be finished using a similar procedure but the extra vertical 2x4 that divides the space up for the gearbox is not required. Simply fix the boot material to the vertical member of the boot framing.

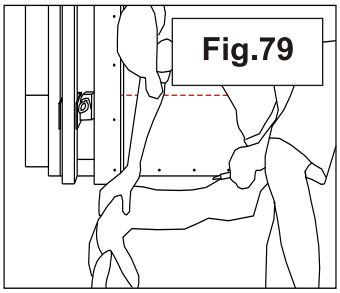

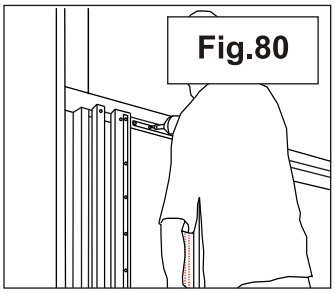

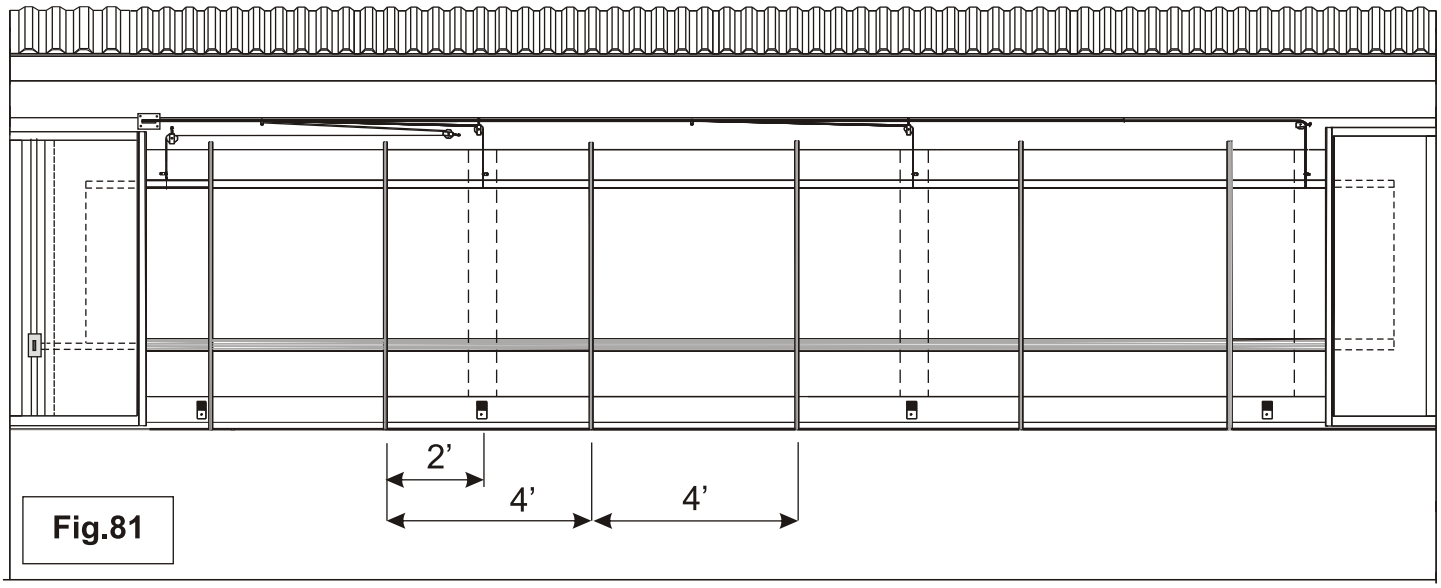

Fig.81

81. Wind Pipe:

Spacing is typically 2’ either side of the 8’-0” o.c. post, creating a 4’-0” space over the entire length of the opening as shown in figure above. (Fig.88)

82. Wind Pipe:

Standard wind pipe and the boot pipe are the same. Each pipe requires a 1/4” hole drilled at each end and at 3/4” from each end of the pipe as shown below. Note: the holes must be drilled in line with each other. (Fig.82)

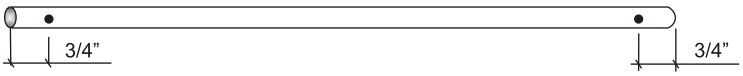

Fig.82

90. Wind Pipe:

Place 1/4" x 2 ½ lags through the bottom holes in the wind pipe in order to fasten them to the sill. Using a level, hold the pipe vertically and drive a 1/4" x 4" lag through the top pipe hole through a 1½" black spacer and into the header. The spacer is required in order to provide enough space for the curtain to seal. (Fig.90)

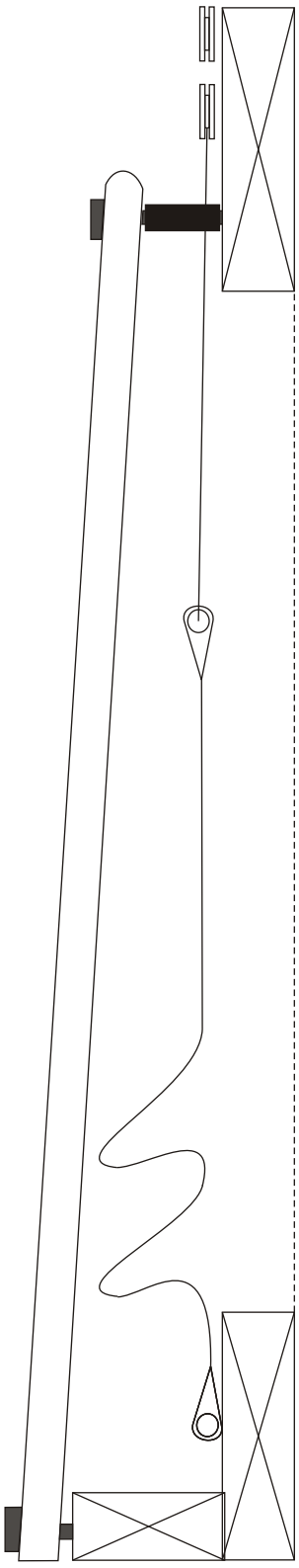

Fig.90

Sun-North
SYSTEMS LTD.

SN010x8001-8007

92 Railway St. Box 668
Seaforth, Ontario, Canada N0K 1W0

Tel: (519)527-2470
Fax: (519) 527-2560